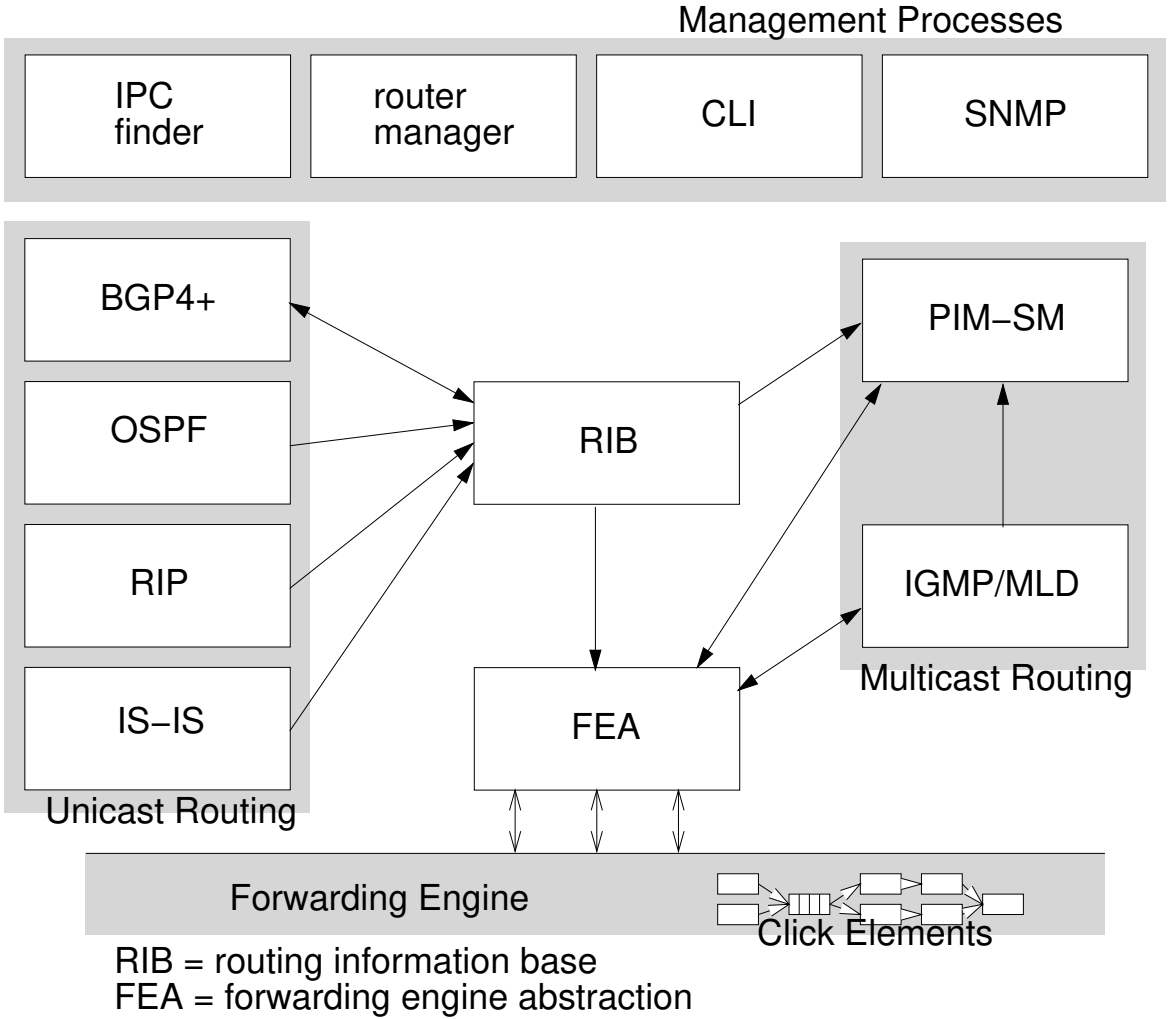
Management Processes
IPC finder
router manager
CLI
SNMP
BGP4+
OSPF
RIP
IS–IS
Unicast Routing
RIB
FEA
PIM–SM
IGMP/MLD
Multicast Routing
Forwarding Engine
Click Elements
RIB = routing information base
FEA = forwarding engine abstraction